Science and Technology of Materials, Interfaces, and Processing
Southern California Chapter

Spring 2018 — Quarterly Newsletter

**Special points of interest:**

- Update on Team HyperXite (UCI)
- Highlights from TAE Technologies Talk & Tour
- Short Courses at AVS 65—Your Feedback Requested
- ***Next Issue:*** OCSEF & LASEF Science Fair Special Award Winners

## Contact Us:

Corinne D'Ambrosio, Chair

*corinne@sccavs.org*

Jeffrey Lince, Treasurer

*jeff@sccavs.org*

Jim Garner, Secretary

*jim@sccavs.org*

**Members at Large:**

Tom Anderson

Greg Mills

Todd Ohaks

Fred Praudisch

Rick Seboldt

Richard Stamberg

Matt Tharpe

General Inquiries:

*info@sccavs.org*

# *LA to San Francisco in 1/2 Hour?*

***Contributed By Jeff Lince***

Imagine going to a train station, buying a ticket estimated to cost $20, stepping into a "pod" that holds 10 or 20 people, and 30 minutes later, stepping out into San Francisco. Or Phoenix. Or Las Vegas. This was originally a dream of Elon Musk, who in 2013 wrote a paper on how such a "Hyperloop" system might work. Five years later, the dream appears to be coming to reality, as a number of companies have proposed routes around the world. The first commercial systems are expected in 2021.

Hyperloop is significantly faster than traditional rail, using pods in low-pressure tubes that could travel over 700 miles an hour. This is enabled by pumping much of the air out of the tubes it travels in, which greatly reduces wind resistance. The pods can either float on air that act like cushions at such high speeds, or use magnetic levitation. Because for the friction reduction that results from the partial vacuum, the system is much more energy-efficient than other modes of transportation.

For the last couple years, SCCAVS has been proud to support HyperXite, a group of sharp and innovative young people at UC Irvine that are developing a pod for the Hyperloop system. The student-led team –with the assistance of top university professors –is engaged in comprehensive design testing and construction of a half-scale Hyperloop pod. In addition to direct sponsorship, SCCAVS arranged for a short course on Vacuum Technology to be given to the HyperXite team.

(*Continued on page 2*)

## *LA to San Francisco in 1/2 Hour? (Continued from Page 1)*

The hard work has paid off. Previously, HyperXite placed in the top 5 of all Hyperloop teams in the world for their overall design. In addition, HyperXite was one of six teams to make it to the open air Hyperloop Tube in the second SpaceX Hyperloop Competition and was the fastest and highest ranked American team.

HyperXite has been invited to take part in the SpaceX Hyperloop Competition III this summer. Last month, HyperXite announced that they have passed the final design phase. The team is currently in the manufacturing and testing phases. The latest pod design is faster and lighter than their previously designed pod, weighing 80% less, and allowing it to reach a maximum speed of 320 mph. The pod represents a considerable engineering feat, which includes an electric motor, a drive wheel, pressure vessel, cooling reservoir, a distributed control system, and a magnetic braking system. The newly designed structure lowers the center of gravity even further than previous versions, improving efficiency (see Figure 1).

(Continued on Page 5)

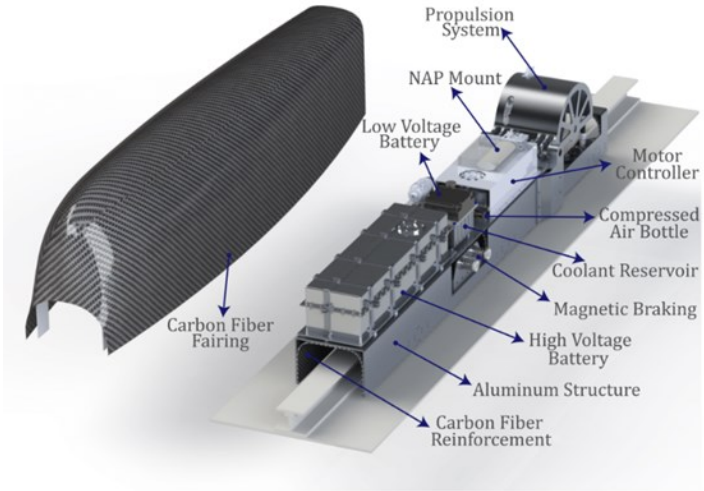


Figure 1: The structure is made out of carbon fiber and reinforced with aluminum, which is both light and strong.

**SOUTHERN CALIFORNIA CHAPTER OF THE AVS : THE SCIENCE & TECHNOLOGY OF MATERIALS, INTERFACES, AND PROCESSING**

Mailing Address:
Southern California Chapter AVS
616 Hartford Avenue
Huntington Beach, CA 92648

info@sccavs.org

**We're on the web!**
**www.sccavs.org**

***Upcoming Events***

ICMCTF
Town & Country Hotel
San Diego, CA
April 23-27, 2018
www.icmctf.org

SVC TechCon
Gaylord Palms Hotel
Orlando, FL
May 5-10, 2018
www.svc.org



## *Highlights from TAE Technologies Talk and Tour*

On Tuesday. March 6, 2018 the SCCAVS presented "Fusion: Not a Pipe Dream Anymore" at TAE Technologies in Foothill Ranch, CA. The event drew 50 people from all segments of the vacuum technology community. The talk was given by Dr. Alan Van Drie , Lead Scientist, heading the vacuum group at Tri Alpha Energy (TAE) Technologies. He is also an executive committee member on the AVS Vacuum Technology Division.

The talk delved into the unique vacuum challenges they have faced over the last 20 years since the company formed, such as how they evolved from using a small simple vacuum system to a large complex UHV system with specialized multi-million L/s pumping systems. The next system, named "Copernicus", will require 300 Kilovolts to a Megavolt of power for beam fusion, and will achieve the goal of break-even with improvements to beam energies, temperatures, magnetic field levels, and pumping systems.

It was a true evening of discovery at the forefront of fusion research taking place in our very own SoCal backyard. As the world confronts what most scientists agree are the detrimental effects of fossil fuel consumption and greenhouse gas emissions, great strides are being made in carbon-free energy sectors of wind, solar and hydroelectric. However, as our planet's power consumption is expected to double by 2050, we will need all kinds of clean generation technologies to meet the many facets of this dramatic increase in demand. TAE Technologies aims to meet that demand by commercializing fusion power within the next 20 years. They dubbed this clean, compact, affordable – and safe approach "Friendly Fusion".

THANK YOU to our hosts at TAE Technologies and to Dr. Alan Van Drie. The following images (continued on page 6) are of our tour of Norman, TAE's current machine named after their founder Dr. Norman Rostoker.

Second Row, Center: Speaker and Lead Scientist at TAE Technologies, Dr. Alan Van Drie

## *Short Course Requests for AVS 65*

AVS 65 will be held from October 21-26, 2018 at the Long Beach Convention Center. The Southern California Chapter of the AVS (SCCAVS) will not be holding a separate Equipment Exhibition and Short Course Program and instead will have a role at the National show in choosing short courses and hosting our community members in the member center for a special hospitality event (details to follow).

We ask YOU, the Southern California Vacuum Technology community to suggest which short courses would interest you. This is the first time the local Chapter has had he opportunity to inform the National Program, and the full short course list is available at https://www.avs.org/Education-Outreach/Short-Courses/Short-Course-Catalog

Send your recommendations and feedback, including the following information, to chair@sccavs.org:

Name:

Company Name:

Email:

Course Suggestion 1:

Course Suggestion 2:

# Interested Registrants:
(This is not a commitment)

## *LA to San Francisco in 1/2 Hour? (Continued from page 2)*

Unlike in previous competitions, for the Hyperloop III competition the pods must be self-propelled. To achieve this they added a motor and a drive wheel to their design (see Figure 2). The wheel will be loaded onto the track inside the tube with a force of 670 pounds to increase traction. As this competition will not involve a coasting period required during previous competitions, air levitation will no longer be necessary.

If you are interested in more information on the HyperXite team, check them out at http://www.hyperxite.com.

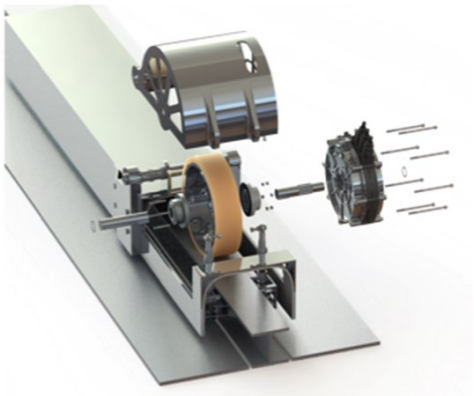

Figure 2: Unlike in previous competitions, for the Hyperloop III competition the pods must be self-propelled. The propulsion system consists of a motor and a drive wheel. They no longer need air levitation as there will not be a coasting period.

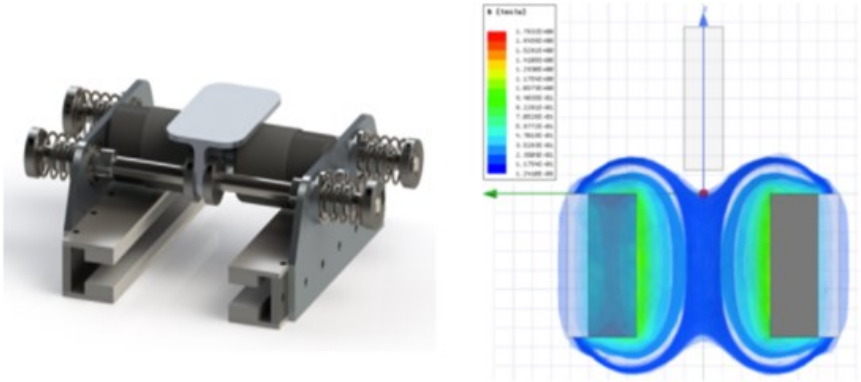

Figure 3: The new pod utilizes eddy current braking by using passive magnetic braking system that hug onto SpaceX's conductive I-beam rail.

## Highlights from TAE Technologies Talk & Tour (Continued from page 3)

Clockwise from top left: Group 1 in front of Norman, Dr. Alan Van Drie, Group 3 in front of Norman, Group 2 in front of Norman, SCCAVS Chair Corinne D'Ambrosio introducing AVS and our speaker (images courtesy of TAE and Jeff Lince)


*Thank you to our sponsors:*



# March/April 2018

| Sun | Mon | Tue | Wed | Thu | Fri | Sat |
|---|---|---|---|---|---|---|
| 18 | 19 | 20 ☼ *Spring Equinox* | 21 | 22 | 23 | 24 |
| 25 | 26 | 27 *SCCAVS Meeting* | 28 | 29 | 30 | 31 ○ *Full Moon* |
| 1   | 2 | 3 | 4 | 5 | 6 | 7 |
| 8 | 9 | 10 | 11 | 12 | 13 | 14 |
| 15 ● *New Moon* | 16 | 17 | 18 | 19 | 20 | 21 |
| 22 | 23 *ICMCTF* | 24 *ICMCTF* | 25 *ICMCTF* | 26 *ICMCTF* | 27 *ICMCTF* | 28 |

AVS®
Science and Technology of Materials, Interfaces, and Processing
Southern California Chapter

We're on the web!
www.sccavs.org